QB Peripheral Pump

Capacity up to 83 L/min(5m³ /h)

Head up to 78m

Liquid Type:Clean water
Applications:Water supply systems, pressure systems,irrigation pumps
Typology:Surface
Family:Peripheral

APPLICATION LIMITS

Manometric suction lift up to 8 m
Liquid temperature up to +40°C
Ambient temperature up to +40°C

INSTALLATION & USE

Recommended for pumping clean water without abrasive particles, and liquids that are chemically nonaggressive for the pump materials.
Reliable, easy to use and economical.
Hence, these pumps are suitable for domestic use and in particular, for the distribution of water for the irrigation of gardens and allotments.
The pumps should be installed in enclosed environment or at least sheltered from inclement weather.

CONSTRUCTION

Pump Body:Cast iron.
Impeller:Brass,with radial peripheral vanes.
Motor Shaft:stainless steel
Mechanical Seal:Ceramic-graphite.
Electric Motor:Single-phase 230V-50Hz with condenser and thermal overload protector built into the copper winding.
Insulation:Class F .
Protection:IP 44.

PERFORMANCE

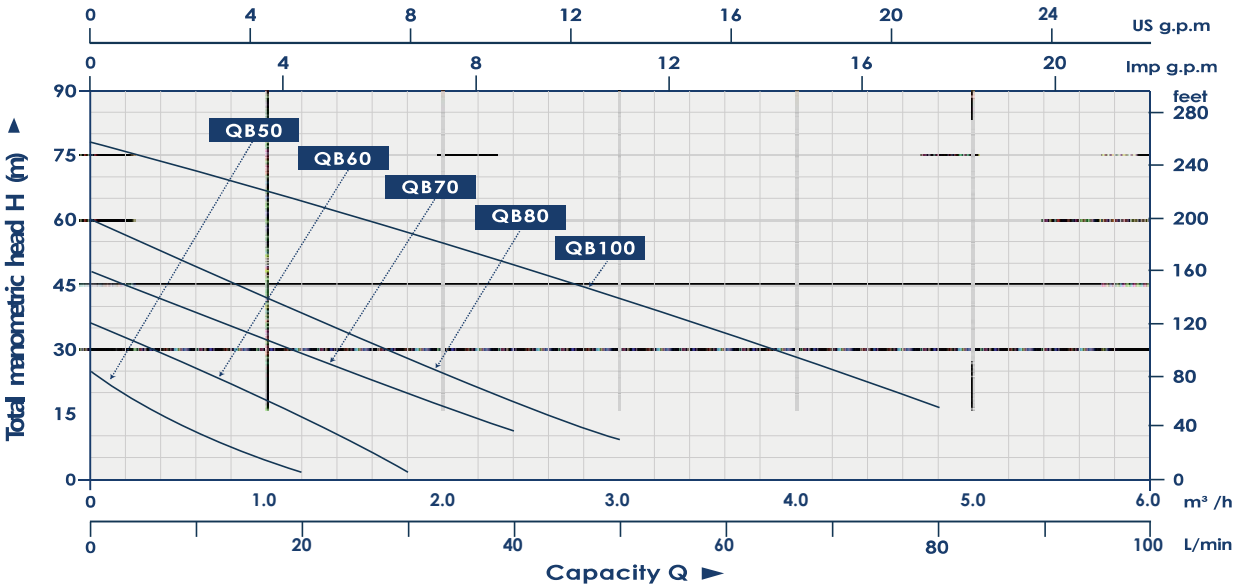

Model	Power		Max Head	Max. Flow		Size	Suct Max.	Q(m³/h)	0	0.3	0.6	0.9	1.2	1.5	1.8	2	2.4	3	3.6	4.2	4.8
	KW	HP	M	L/min	m³/H	Inch	M	Q(L/min)	0	5	10	15	20	25	30	33	40	50	60	70	80
QB50	0.125	0.17	20	22	1.3	1"×1"	8		20	15.7	10.7	6.7	1.8	-	-	-	-	-	-	-	-
QB60	0.37	0.5	36	33	2	1"×1"	8		36	30.7	24.8	19.3	14.8	8.5	2.5	-	-	-	-	-	-
QB70	0.55	0.75	48	50	2.5	1"×1"	8	H(m)	48	46	40.7	34.9	29.6	24.4	19.7	15.2	11	-	-	-	-
QB80	0.75	1	60	58	3	1"×1"	8		60	55.7	50.2	44.1	37	28.7	26.7	23.8	19.3	9.7	-	-	-
QB100	1.5	2	78	83	5	1"×1"	8		78	76	73.5	71.1	66.9	62.4	57.8	53.3	49.2	40.7	31.7	22.9	16.1

DIAGRAM

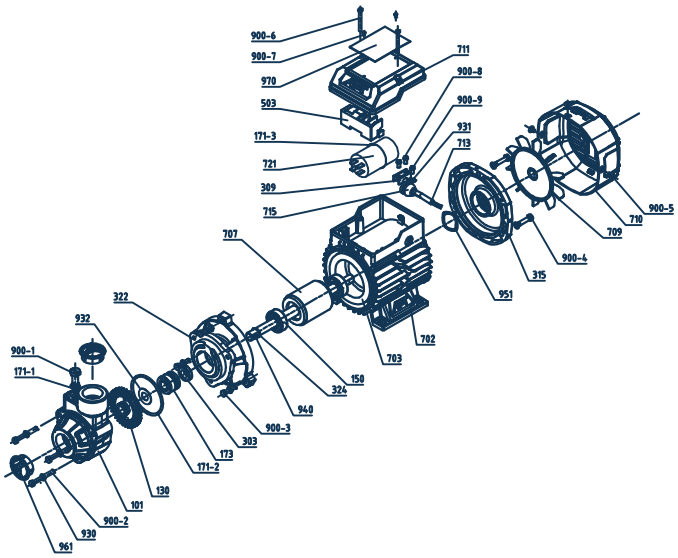

503	Terminal block	713	Cable
324	Snap Spring	711	Terminal box
322	Connector	710	Fan cover
315	End cover	709	Fan
309	Cable pressing plate	707	Cast aluminum rotor
303	Water Retaining Ring	703	Stator core with winding
173	Mechanical Seal	702	Barrel
171-3	O ring	970	Nameplate
171-2	O ring	961	Dust cover
171-1	O ring	951	Wave washer
150	Bearing	940	key
130	Impeller	932	Flat Washer
101	Pump body	931	External tooth lock washer
900-4	Hexagon headed bolt	930	Spring Washer
900-3	Hexagon headed bolt	900-9	Crossed round head screw with washer
900-2	Hexagon headed bolt	900-8	Phillips pan head screw
900-1	Hexagon headed bolt	900-7	Nameplate rivet
721	Run capacitor	900-6	Phillips pan head screw
715	Cable sheath	900-5	Phillips pan head screw

Product parameters

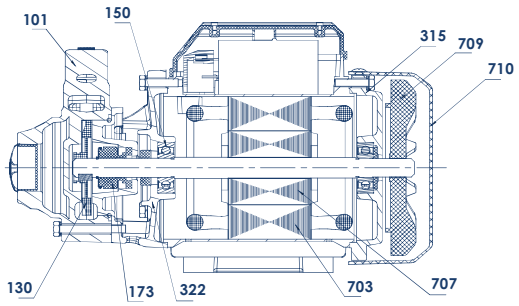

POS.	COMPONENT	CONSTRUCTION CHARACTERISTICS
101	Pump body	Castiron
130	impeller	Brass
150	bearing	2-6201RZ
173	Mechanical seal	Ceramic - graphite
315	End cover	Castiron
322	coupling	Castiron
703	Stator core	Stator core with winding
707	Rotor	Cast aluminum rotor
709	Fan	Plastics
710	Fan cover	Plastics ABS

product dimensions

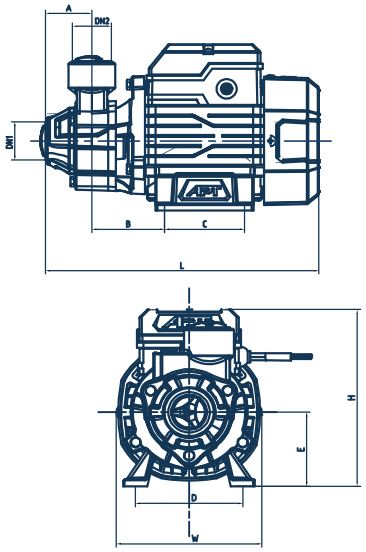

Model	DN1	DN2	Dimension(mm)							
			L	W	H	A	B	C	D	E
QB50	1"	1"	224.5	130	158.8	40	59	55	103.5	65
QB60	1"	1"	250	126	157	41.5	67	73.5	92	66
QB70	1"	1"	283	149.5	182.5	47.5	67.5	90.5	112.5	74
QB80	1"	1"	283	149.5	182.5	47.5	67.5	90.5	112.5	74
QB100	1"	1"	336	174	213.5	57	86	100	124.5	85