GP Submersible Pump

Capacity up to 267 L/min (16 m³ /h)

Head up to 12 m

APPLICATION LIMITS

Maximum operating depth 5m below water level
Liquid temperature+35℃
Ambient temperature up to+40℃

INSTALLATION & USE

Completely constructed in anti-corrosive materials.
Majorly used for emptying pits and cisterns for gardening.
Suitable for clean water and liquids that does not contain abrasive particles.
As a result of the design solutions which were adopted such as the complete cooling of the motor and the shaft with double seal these pumps are easy and reliable.

CONSTRUCTION

Pump Body:Plastic.
Impeller:Plastic.
Motor Shaft:stainless steel
Mechanical Seal:Ceramic-graphite.
Electric Motor:Single-phase with condenser and thermal overload protector built into the copper winding.
Insulation:Class B.
Protection:IP X8

PERFORMANCE

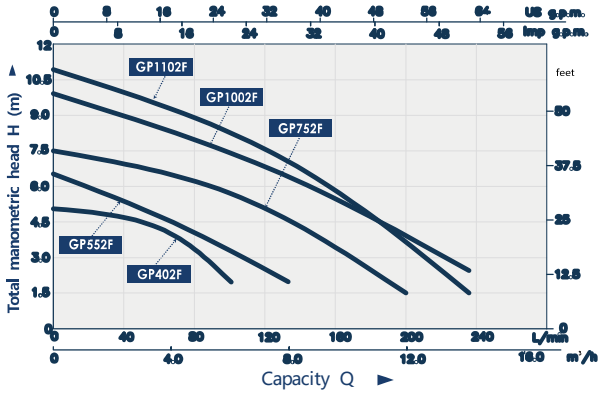

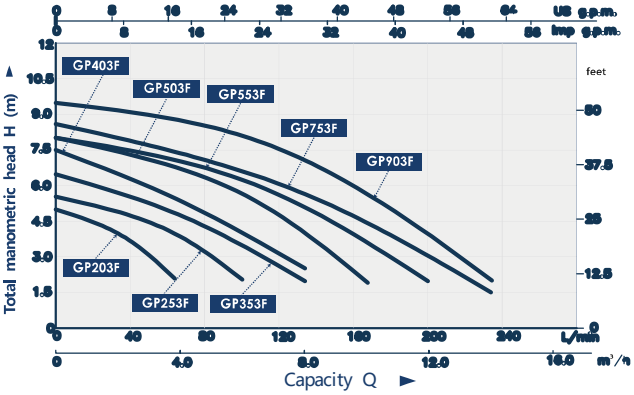

Model	Power		Max Head	Max Flow	Size	Q(m³/h)	0	2	4	6	8	10	12	14
	KW	HP	M	m³/H	Inch	Q(L/min)	0	33	67	100	133	167	200	233
GP402F	0.4	0.55	5	8	1" / 1 ¼" /1 ½"		5	4.2	3.8	2	-	-	-	-
GP552F	0.55	0.75	6.5	11	1" / 1 ¼" /1 ½"		6.5	5.8	4.5	4.5	2	-	-	-
GP752F	0.75	1	7.5	13	1" / 1 ¼" /1 ½"		7.5	7	6.6	5.7	5	3.4	1.5	-
GP1002F	0.9	1.2	10	15	1" / 1 ¼" /1 ½"		10	8.7	8	7.2	6.5	5.8	5	2.6
GP1102F	1.1	1.5	12	16	1" / 1 ¼" /1 ½"	H(m)	11	10.5	9.5	8.5	7.2	6	4	1.5
GP203F	0.2	0.26	5	4	1" / 1 ¼" /1 ½"		5	4	2	-	-	-	-	-
GP253F	0.25	0.34	5.5	6	1" / 1 ¼" /1 ½"		5.5	5	4	2	-	-	-	-
GP353F	0.35	0.47	6.5	9	1" / 1 ¼" /1 ½"		6.5	5.7	4.7	2.5	2	-	-	-
GP403F	0.4	0.55	7.5	9	1" / 1 ¼" /1 ½"		7.5	6.5	5.4	4	2.5	-	-	-
GP503F	0.5	0.7	8	11	1" / 1 ¼" /1 ½"		8	7.3	6.6	5.8	4.5	2	-	-
GP553F	0.55	0.75	8	13	1" / 1 ¼" /1 ½"		8	7.3	6.8	6.1	4.8	3	2	-
GP753F	0.75	1	9	14	1" / 1 ¼" /1 ½"		8.5	8.1	7.7	6.8	5.8	4.8	3	1.5
GP903F	0.9	1.2	9.5	15	1" / 1 ¼" /1 ½"		9.5	9.2	8.7	8	7.2	6	4.8	2

DIAGRAM

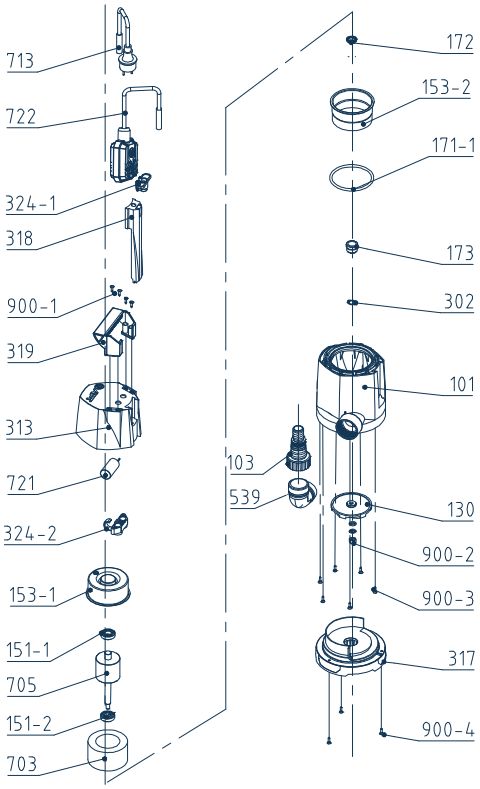

101	Pump body
103	Outlet
130	Impeller
151-1	Deep groove ball bearings
151-2	Deep groove ball bearings
153-1	Upper bearing seat
153-2	Upper bearing seat
171-1	O ring
172	Skeleton oil seal
173	Mechanical seal
302	Retaining ring
313	Top cover
317	Base
318	Switch side cover
319	Handle
324-1	Cable clamp
324-2	Capacitor clamp
539	Elbow
703	Stator core with winding
705	Rotor
713	Cable
721	Capacitor
722	Level switch
900-1	Phillips pan head tapping screw
900-2	Slotted hexagon nut
900-3	Phillips pan head tapping screw
900-4	Phillips pan head tapping screw

Product parameters

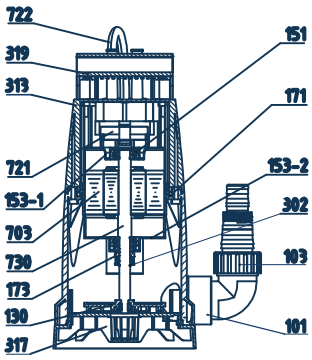

POS.	COMPONENT	CONSTRUCTION CHARACTERISTICS
101	PUmp bo dy	Plastic PP
103	o utl et	Plastic PP
130	Impel l er	Plastic PA+GF20
151	bear i n g	6201
153-1	upper bear i n g seat	Carbon steel
153-2	Lo wer bear i n g seat	Carbon steel
171	O-r i n g	Rubber NBR
173	MECHANICAL SEAL	Ceramic - graphite
302	r etaining r i n g	Stainless steel
313	To p co v er	Plastic PP
317	ba s e	Plastic PP
318	Fl o a t s w i t c h	Water pump level protector
319	Han d l e	Plastic PP
703	St a t o r	Stator core with winding
721	Ca p a c i t o r	Electronic device
730	r o t o r	Stainless steel

product dimensions

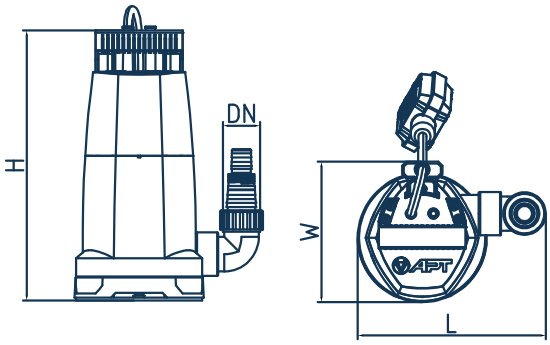

Model	DN1	L(mm)	W(mm)	H(mm)
GP402F	1" / 1 ¼" /1 ½"	234	175	367
GP552F	1" / 1 ¼" /1 ½"	234	175	367
GP752F	1" / 1 ¼" /1 ½"	234	175	367
GP1002F	1" / 1 ¼" /1 ½"	234	175	367
GP1102F	1" / 1 ¼" /1 ½"	234	175	367
GP203F	1" / 1 ¼" /1 ½"	234	175	336
GP253F	1" / 1 ¼" /1 ½"	234	175	336
GP353F	1" / 1 ¼" /1 ½"	234	175	336
GP403F	1" / 1 ¼" /1 ½"	234	175	336
GP503F	1" / 1 ¼" /1 ½"	234	175	336
GP553F	1" / 1 ¼" /1 ½"	234	175	336
GP753F	1" / 1 ¼" /1 ½"	234	175	336
GP903F	1" / 1 ¼" /1 ½"	234	175	336