GV Submersible Sewage Pump

Capacity up to 767 L/min(46 m³ /h)

Head up to 17.5m

APPLICATION LIMITS

5 m maximum immersion depth
Maximum liquid temperature up to+35℃
Maximum ambient temperature up to +40℃

INSTALLATION & USE

Equipped with a vortex impeller.
Strong sewage discharge capacity.
Pumping sewage containing particles and clean water.
Stainless steel casing, hence suitable for pumping in corrosive medium.
Can pass through the dirt and debris with large particle diameter which is suitable for discharge and transportation of sewage.
Equipped with a thick base which has a large water output and can be used in various sewage systems.
Suitable for chemical industry, petroleum, pharmaceutical mining, paper industry cement plants, steel plants, power plants coal processing industry, urban sewage, treatment plants drainage systems, municipal, construction sites and other industries.

CONSTRUCTION

Pump Body:Cast iron.
Impeller:Vortex impeller in cast iron
Motor Bracket:Stainless steel.
Motor Shaft:Stainless steel.
Mechanical Seal:Ceramic-graphite and Sic to graphite.
Electric Motor:Single-phase 230V-50Hz with condenser thermal overload protector built into the copper winding.
Insulation:Class B.
Protection:IP X8.

PERFORMANCE

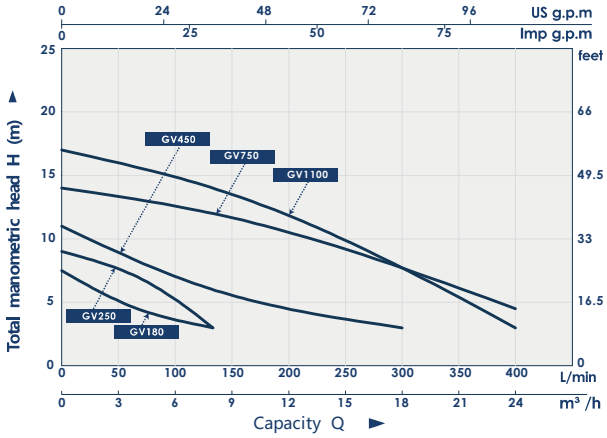

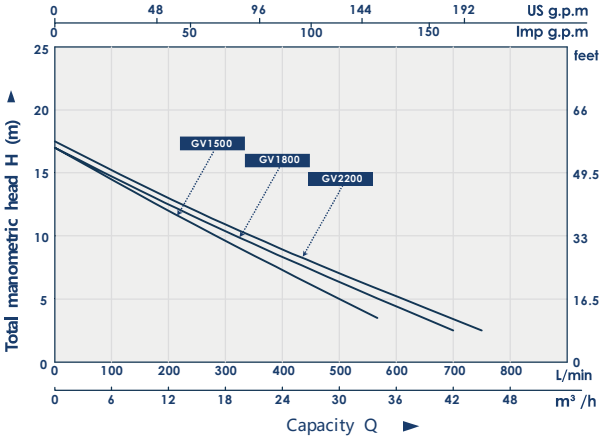

Model	Power		Max Head	Max. Flow	Size	Max. Diameter of Particle	Q(m³/h)	0	4	8	12	16	18	24	30	34	38	42	46
	KW	HP	M	m³/H	mm	mm	Q(L/min)	0	67	133	200	267	300	400	500	567	633	700	767
GV180	0.18	0.25	7.5	8	25/32/40	5		7.5	4.5	3	-	-	-	-	-	-	-	-	-
GV250	0.25	0.35	9	8	25/32/40	5		9	7	3	-	-	-	-	-	-	-	-	-
GV450	0.45	0.6	11	18	50	15		11	9	7	6	5	3	-	-	-	-	-	-
GV750	0.75	1	14	24	50	15		14	13	12	10.5	9	7	4.5	-	-	-	-	-
GV1100	1.1	1.5	17	24	50	15	H(m)	17	16	14	12	10	8	3	-	-	-	-	-
GV1500	1.5	2	17	34	50	15		17	14.5	13	12	11	10.5	8.5	6	3.5	-	-	-
GV1800	1.8	2.5	17	42	80	15		17	15	14	12.5	12	11.5	10	7.5	5	4	2.5	-
GV2200	2.2	3	17.5	46	80	20		17.5	16	15	13	12.	12	10.5	8	6.5	4.5	3	2.5

DIAGRAM

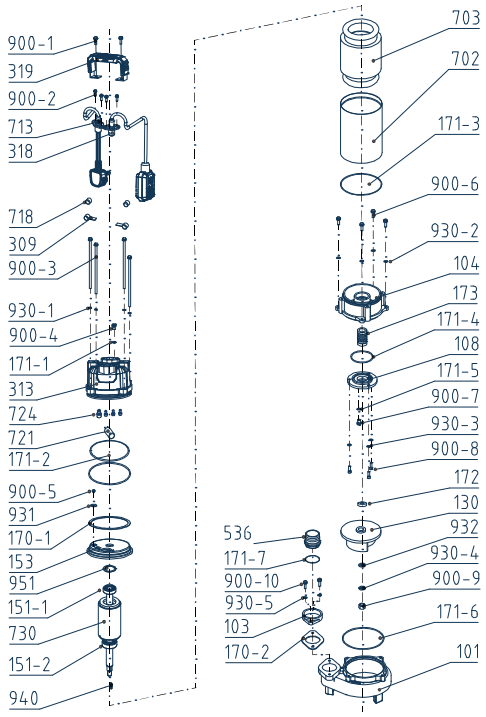

900-1	Hexagon headed bolt	702	Barrel
319	Handle	171-3	O ring
900-2	Hexagon socket head cap screw	900-6	Hexagon headed bolt
713	Cable	930-2	Spring washer
318	Float switch	104	Chamber
718	Cable harness	173	Mechanical seal
309	Cable pressing plate	171-4	O ring
900-3	Hexagon headed bolt	108	Chamber cober
930-1	Spring washer	171-5	O ring
900-4	Slotted cylinder head screw	900-7	Slotted cylinder head screw
171-1	O ring	930-3	Spring washer
313	Top cover	900-8	Hexagon socket head cap screw
724	Terminal Cap	172	Skeleton oil seal
721	Run Capacitor	130	Impeller
171-2	O ring	932	Flat washer
900-5	Cross recessed round head screw with washer	930-4	Spring washer
931	External tooth lock washer	900-9	Slotted hexagon nut
170-1	Gasket	171-6	O ring
153	Upper bearing seat	101	Pump body
951	Wave washer	170-2	Gasket
151-1	Deep groove ball bearings	103	Outlet
730	Rotor assembly	930-5	Spring washer
151-2	Deep groove ball bearings	900-10	Hexagon headed bolt
940	Key	171-7	O ring
703	Stator core with winding	536	Outlet section

Product parameters

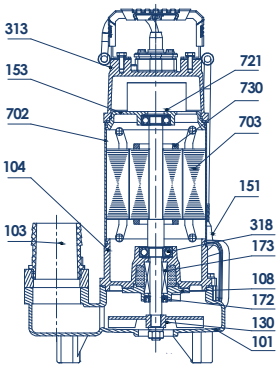

POS.	COMPONENT	CONSTRUCTION CHARACTERISTICS
101	PUmp bo dy	Cast iron
103	o utl et	Cast iron
104	Oil c h amber	Cast iron
108	Oil chamber cover	Cast iron
130	impel l er	Cast iron
151	bear i n g	6203-2RZ
153	upper bear i n g seat	Cast iron
172	Skel et o n o il s eal	Rubber NBR
173	MECHANICAL SEAL	Ceramic - graphite / Ceramic-Silicon Carbide
313	to p c o v er	Cast iron
318	Fl o at switch	Water pump level protector
702	bar r el	Stainless steel
703	Stator	Stator core with winding
721	r un Capacitor	Electronic device
730	r o tor assembly	Cast Aluminum Rotor

product dimensions

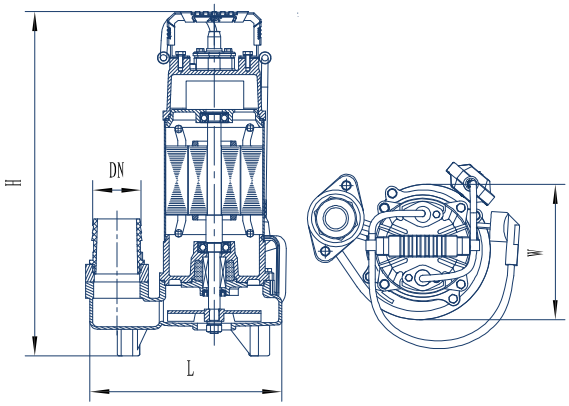

Model	DN	L(mm)	W(mm)	H(mm)
GV180	1" / 1 ¼" /1 ½"	168	120	370
GV250	1" / 1 ¼" /1 ½"	168	120	380
GV450	2"	168	160	426
GV750	2"	230	160	426
GV1100	2"	230	180	492
GV1500	2"	281	176	522
GV1800	3"	305	189	540
GV2200	3"	305	189	540